Ultra Slim Drawer Series

Standard Drawer Installation Dimension

- Load capacity: 35Kg
- Length: 250-550mm
- Drawer height adjustment:0~+3mm
- Drawer depth adjustment: 0~+5mm
- Drawer width adjustment: ±1.5mm

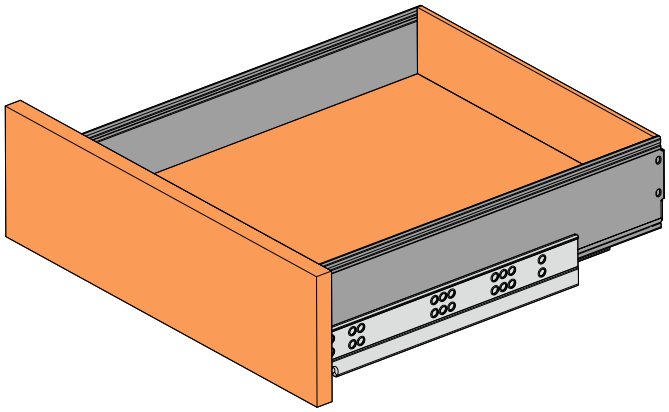

Hole Position (mm)

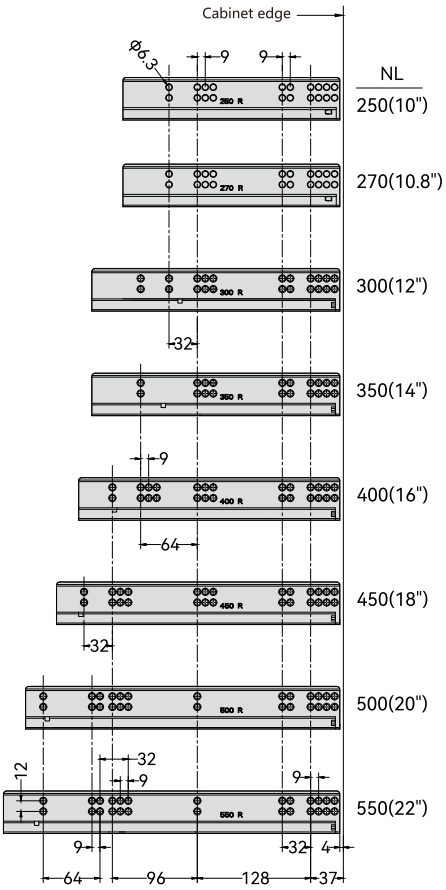

L Low Drawer Height = 89

Internal cabinet space

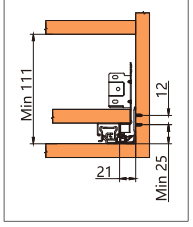

Front connector drilling size

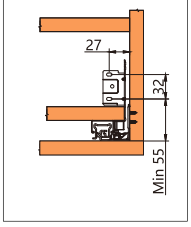

Front panel drilling size

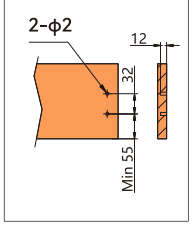

Rear panel drilling size

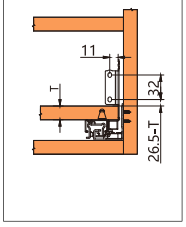

M Medium Drawer Height = 127

Internal cabinet space

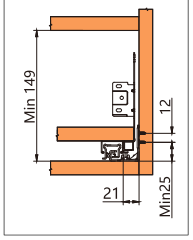

Front connector drilling size

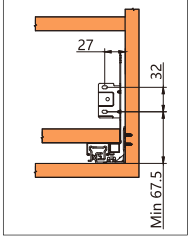

Front panel drilling size

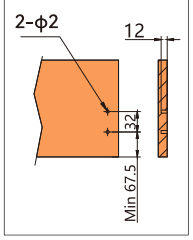

Rear panel drilling size

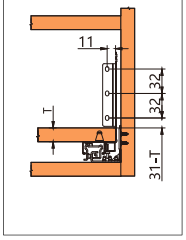

H High Drawer Height = 157

Internal cabinet space

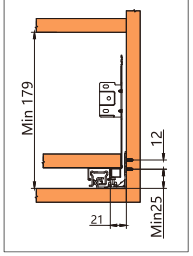

Front connector drilling size

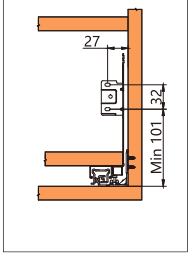

Front panel drilling size

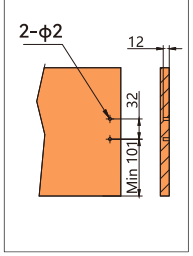

Rear panel drilling size

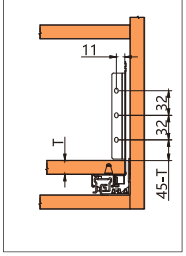

Base panel / Rear panel cutting size

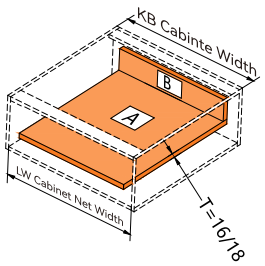

KB: Cabinte Width
LW: Cabinet Net Width
NL: Nominal Length
T: Base Panel Thickness

Base panel size

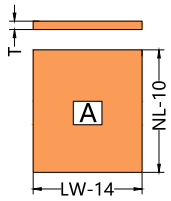

Base panel width	LW(Cabinte Width)-14mm
Base panel length	NL(Nominal Length)-10mm

Rear panel size

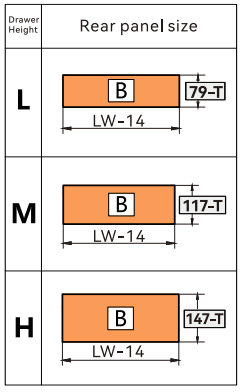

Installation Dimensions (mm)

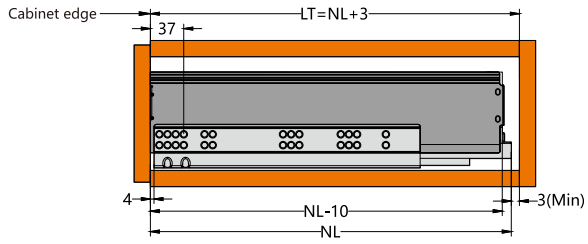

NL= Nominal Length
LT= Internal cabinet depth

LMH Drawer Assembly

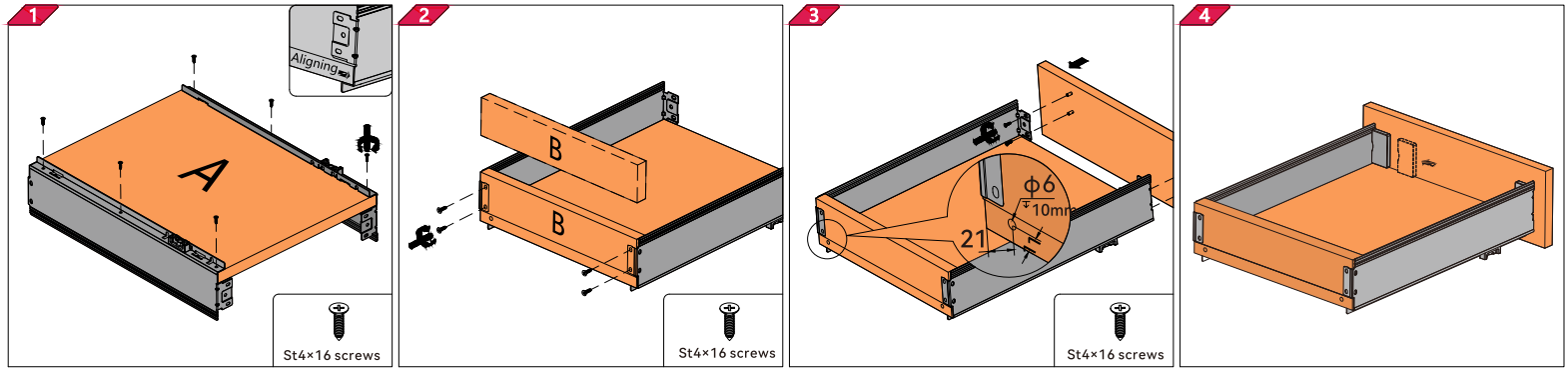

LMH Drawer Installation

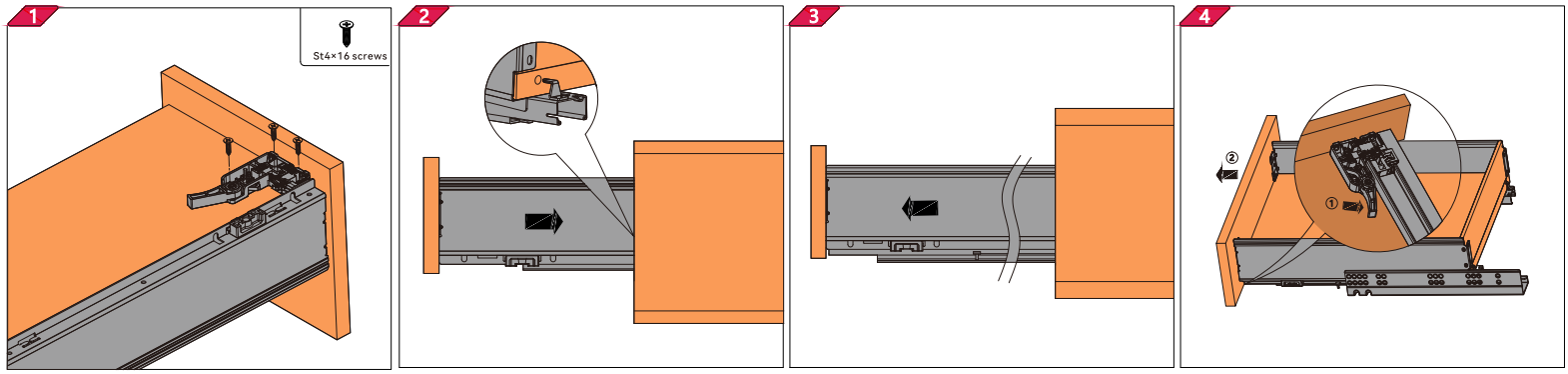

LMH Drawer Adjustment

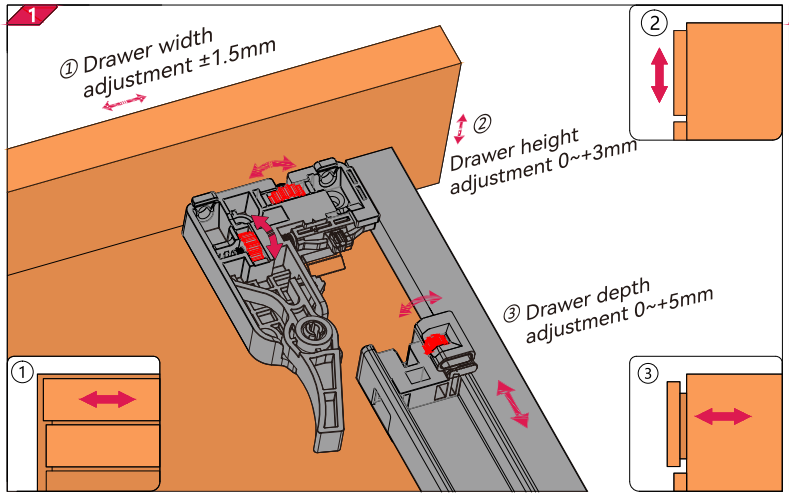

LMH Aluminum Back Panel Installation

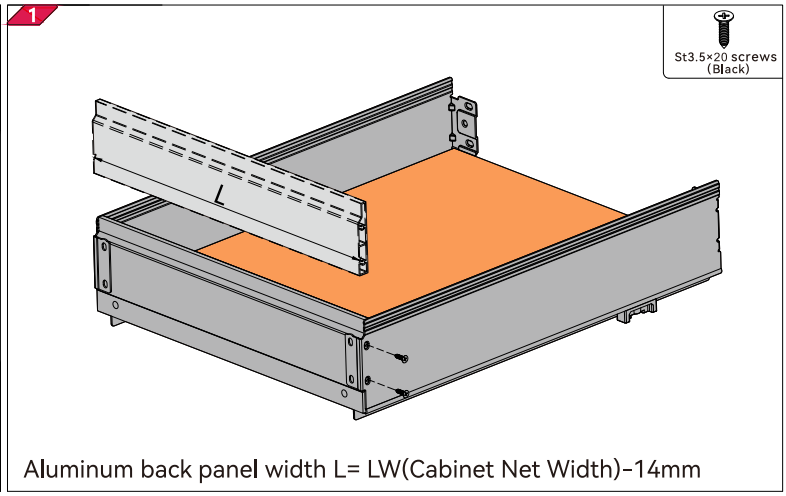

Aluminum back panel width L= LW(Cabinet Net Width)-14mm

LMH Base Panel Pre-drilling Size

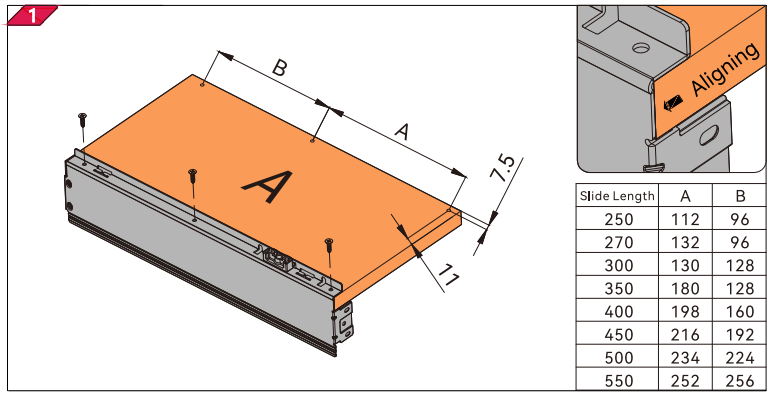

Slide Length	A	B
250	112	96
270	132	96
300	130	128
350	180	128
400	198	160
450	216	192
500	234	224
550	252	256